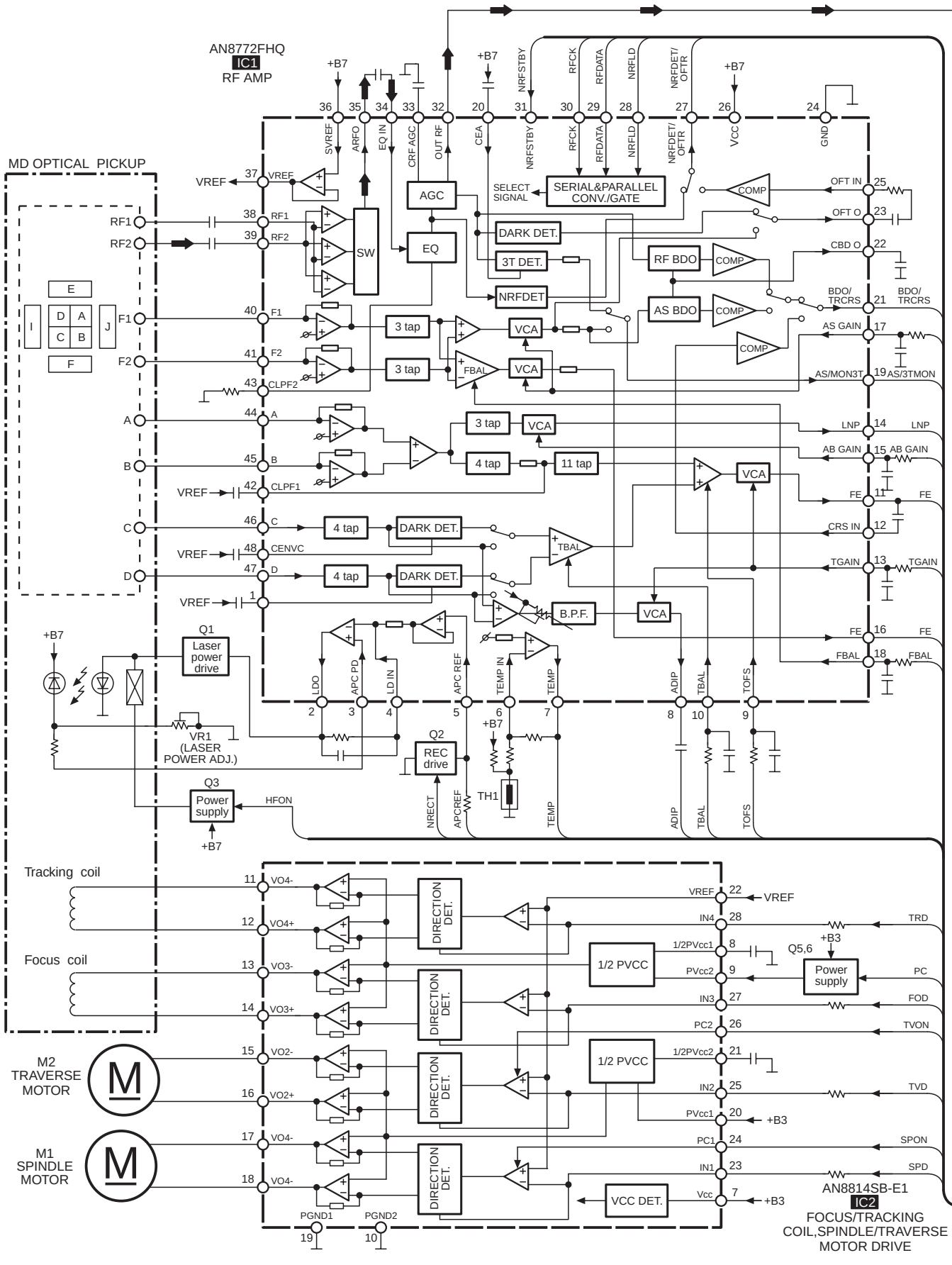
AN8772FHQ
IC1
RF AMP
MD OPTICAL PICKUP
SERIAL&PARALLEL CONV./GATE
SELECT SIGNAL
AGC
EQ
SW
DARK DET.
3T DET.
NRFDET
RF BDO
AS BDO
COMP
VCA
3 tap
4 tap
11 tap
FBAL
TBAL
B.P.F.
Q1
Laser power drive
VR1 (LASER POWER ADJ.)
Q2
REC drive
Q3
Power supply
HFON
TH1
Tracking coil
Focus coil
M2 TRAVERSE MOTOR
M1 SPINDLE MOTOR
DIRECTION DET.
1/2 PVCC
VCC DET.
Q5,6
AN8814SB-E1
IC2
FOCUS/TRACKING COIL,SPINDLE/TRAVERSE MOTOR DRIVE

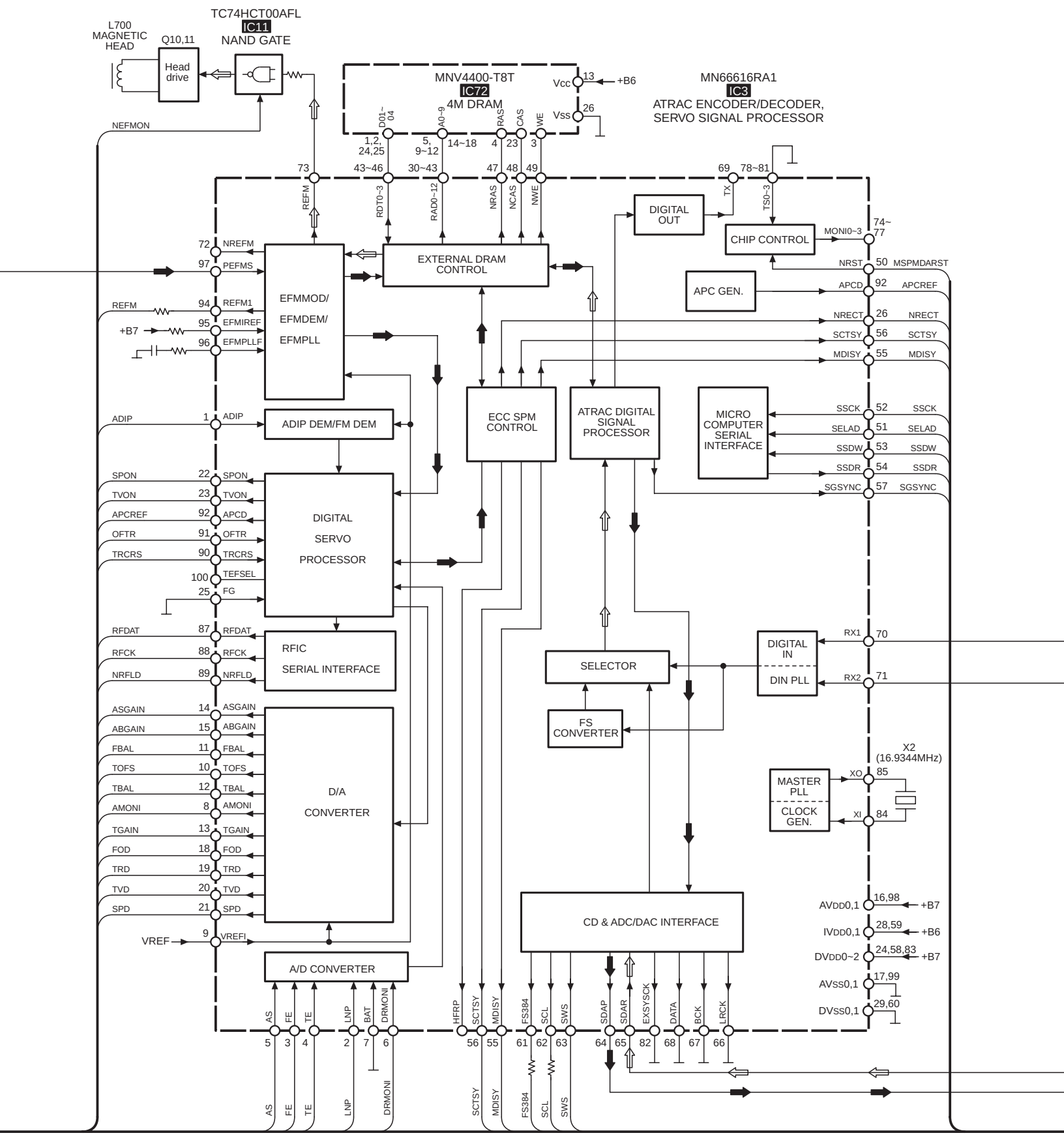
L700
MAGNETIC
HEAD
Q10,11
Head
drive
TC74HCT00AFL
IC11
NAND GATE
NEFMON
MNV4400-T8T
IC72
4M DRAM
Vcc
Vss
+B6
MN66616RA1
IC3
ATRAC ENCODER/DECODER,
SERVO SIGNAL PROCESSOR
EFMMOD/
EFMDEM/
EFMPLL
EXTERNAL DRAM
CONTROL
DIGITAL
OUT
CHIP CONTROL
APC GEN.
ECC SPM
CONTROL
ATRAC DIGITAL
SIGNAL
PROCESSOR
MICRO
COMPUTER
SERIAL
INTERFACE
ADIP DEM/FM DEM
DIGITAL
SERVO
PROCESSOR
RFIC
SERIAL INTERFACE
D/A
CONVERTER
A/D CONVERTER
SELECTOR
FS
CONVERTER
DIGITAL
IN
DIN PLL
MASTER
PLL
CLOCK
GEN.
X2
(16.9344MHz)
CD & ADC/DAC INTERFACE
AVDD0,1
IVDD0,1
DVDD0~2
AVSS0,1
DVSS0,1
+B7
+B6
VREF
REFM
+B7

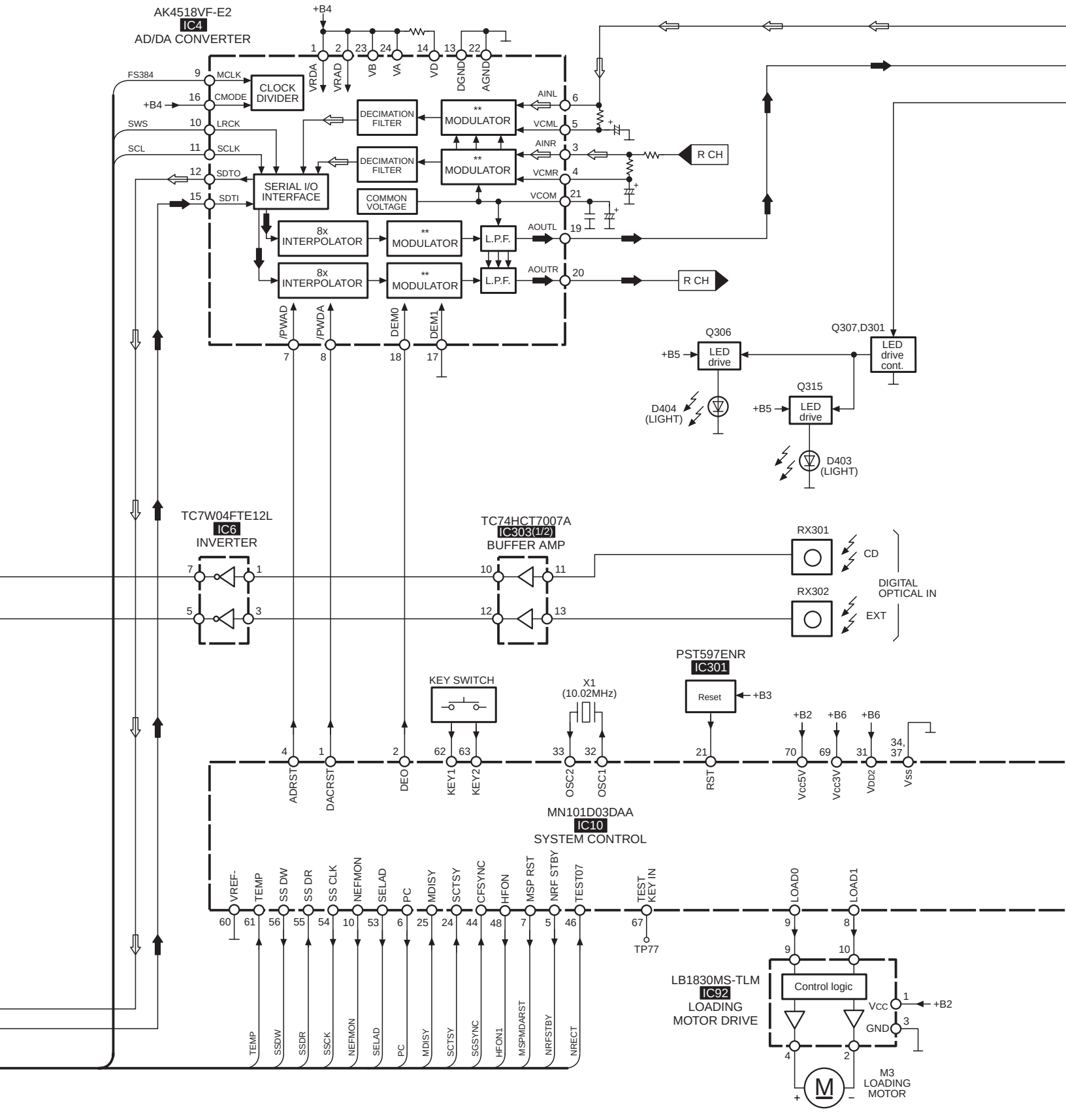
AK4518VF-E2
IC4
AD/DA CONVERTER
+B4
VRDA
VRAD
VB
VA
VD
DGND
AGND
FS384
MCLK
CMODE
CLOCK DIVIDER
SWS
LRCK
SCL
SCLK
SDTO
SDTI
SERIAL I/O INTERFACE
DECIMATION FILTER
MODULATOR
COMMON VOLTAGE
AINL
VCML
AINR
VCMR
VCOM
R CH
8x INTERPOLATOR
L.P.F.
AOUTL
AOUTR
/PWAD
/PWDA
DEM0
DEM1
Q306
LED drive
+B5
D404 (LIGHT)
Q307,D301
LED drive cont.
Q315
D403 (LIGHT)
TC7W04FTE12L
IC6
INVERTER
TC74HCT7007A
IC303(1/2)
BUFFER AMP
RX301
CD
RX302
EXT
DIGITAL OPTICAL IN
PST597ENR
IC301
Reset
+B3
KEY SWITCH
X1
(10.02MHz)
+B2
+B6
ADRST
DACRST
DEO
KEY1
KEY2
OSC2
OSC1
RST
Vcc5V
Vcc3V
VDD2
Vss
MN101D03DAA
IC10
SYSTEM CONTROL
VREF-
TEMP
SS DW
SS DR
SS CLK
NEFMON
SELAD
PC
MDISY
SCTSY
CFSYNC
HFON
MSP RST
NRF STBY
TEST07
TEST KEY IN
LOAD0
LOAD1
TP77
LB1830MS-TLM
IC92
LOADING MOTOR DRIVE
Control logic
Vcc
GND
M3 LOADING MOTOR
SSDW
SSDR
SSCK
SGSYNC
HFON1
MSPMDARST
NRFSTBY
NRECT

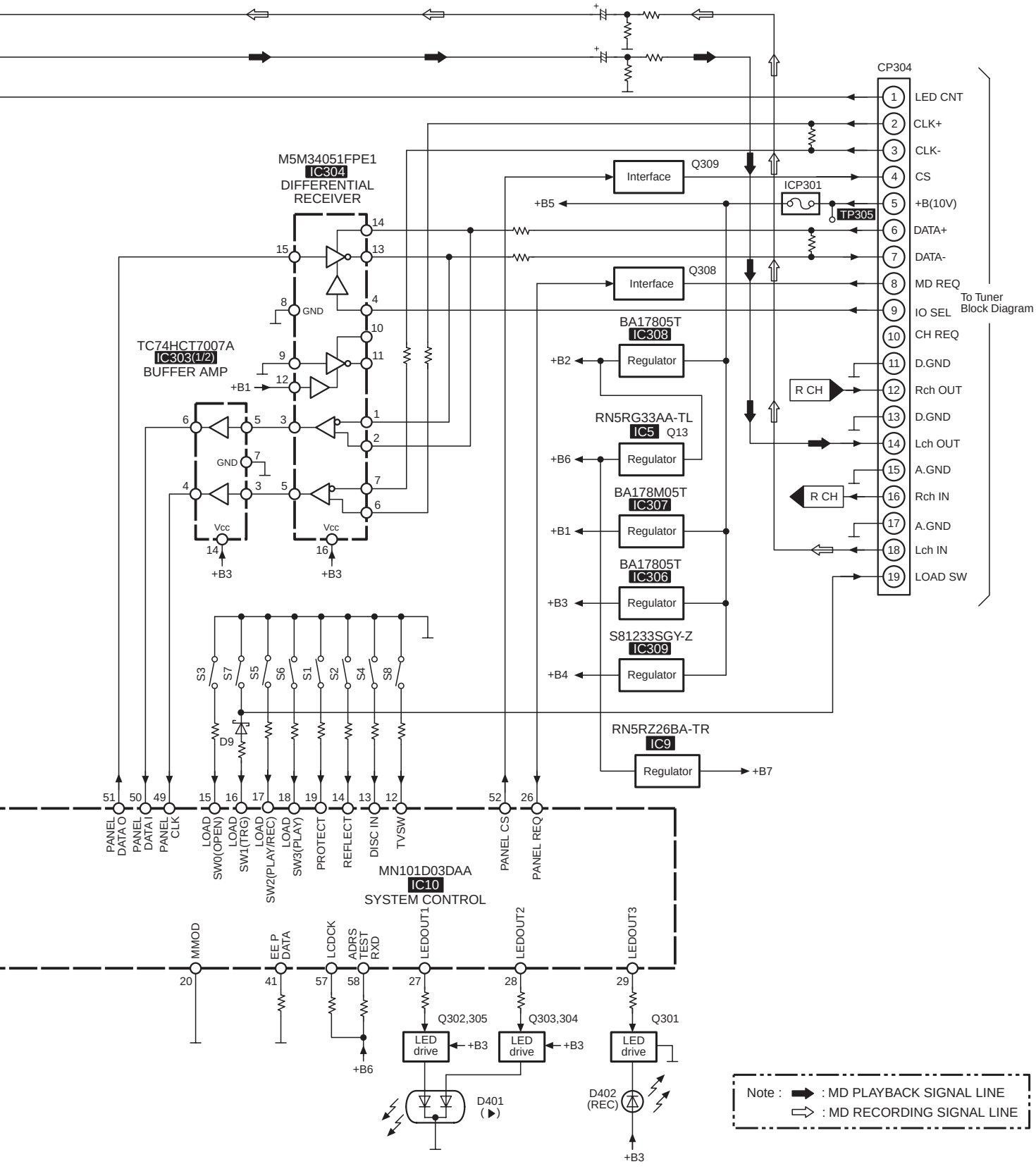
CP304
LED CNT
CLK+
CLK-
CS
+B(10V)
DATA+
DATA-
MD REQ
IO SEL
CH REQ
D.GND
Rch OUT
D.GND
Lch OUT
A.GND
Rch IN
A.GND
Lch IN
LOAD SW
To Tuner Block Diagram
M5M34051FPE1
IC304
DIFFERENTIAL RECEIVER
TC74HCT7007A
IC303(1/2)
BUFFER AMP
Interface
Q309
Interface
Q308
ICP301
TP305
BA17805T
IC308
Regulator
RN5RG33AA-TL
IC5
Q13
Regulator
BA178M05T
IC307
Regulator
BA17805T
IC306
Regulator
S81233SGY-Z
IC309
Regulator
RN5RZ26BA-TR
IC9
Regulator
R CH
R CH
+B5
+B2
+B6
+B1
+B3
+B4
+B7
GND
Vcc
S3
S7
S5
S6
S1
S2
S4
S8
D9
PANEL DATA O
PANEL DATA I
PANEL CLK
LOAD SW0(OPEN)
LOAD SW1(TRG)
LOAD SW2(PLAY/REC)
LOAD SW3(PLAY)
PROTECT
REFLECT
DISC IN
TVSW
PANEL CS
PANEL REQ
MN101D03DAA
IC10
SYSTEM CONTROL
MMOD
EE P DATA
LCDCK
ADRS TEST RXD
LEDOUT1
LEDOUT2
LEDOUT3
Q302,305
Q303,304
Q301
LED drive
D401
D402 (REC)
Note :
: MD PLAYBACK SIGNAL LINE
: MD RECORDING SIGNAL LINE